WATTS®	FS-750 Tag: _____	12" Square x 10" Deep Sanitary Floor Sink

SPECIFICATION: Watts Drainage FS-750 12" (305) square x 10" (254) deep sanitary floor sink with white acid resistant porcelain enamel coated interior, loose set porcelain enamel coated cast iron grate, aluminim dome bottom strainer, and no hub (standard) outlet.

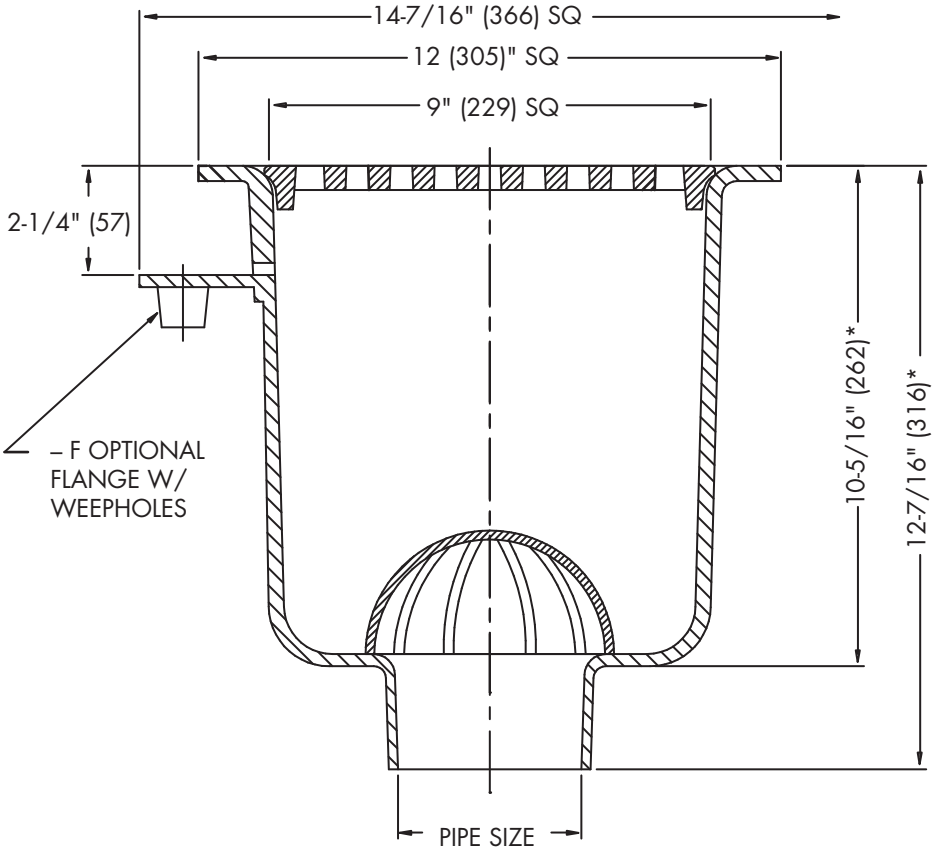

*ADD 5/8" (16) FOR –1 NICKEL BRONZE TOP OR –3 STAINLESS STEEL TOP

Free Area Sq. In.
31

Pipe Sizing (Select One)

Suffix	Description	
2	2"(51) Pipe Size	☐
3	3"(76) Pipe Size	☐
4	4"(102) Pipe Size	☐

Outlet Type (Select One)

Suffix	Description	
NH	No Hub (MJ)	☐
P	Push On	☐

Options (Select One or More)

Suffix	Description	
-F	Flange with Weepholes	☐
-FC	Flange w/ Weepholes & Flashing Clamp	☐
-1	Nickel Bronze Top	☐
-3	Stainless Steel Rim and Grate	☐
-5	Sediment Bucket	☐
-6	Vandal Proof (-1, -3 Only)	☐
-7	Trap Primer Tapping	☐
-9	Hinged Grate (-1 Only)	☐
-21	Secondary Strainer	☐
-33	Less Grate	☐
-128	Grate with 2-1/2"(64) Center Opening	☐
-150	1/2 Grate	☐
-175	3/4 Grate	☐
-F4-1	4" Round Nickel Bronze Funnel	☐
-F6-1	6" Round Nickel Bronze Funnel	☐
-G-1	4x9" Oval Nickel Bronze Funnel	☐
-US	Buy American Compliant (Available with -1 Only)	☐

Job Name _____ Contractor _____

Job Location _____ Contractor's P.O. No. _____

Engineer _____ Representative _____

Watts product specifications in U.S. customary units and metric are approximate and are provided for reference only. For precise measurements, please contact Watts Technical Service. Watts reserves the right to change or modify product design, construction, specifications, or materials without prior notice and without incurring any obligation to make such changes and modifications on Watts products previously or subsequently sold.

WATTS®

A Watts Water Technologies Company

USA: Tel: (800) 338-2581 • Fax: (828) 248-3929 • Watts.com
Canada: Tel: (905) 332-4090 • Fax: (905) 332-7068 • Watts.ca
Latin America: Tel: (52) 81-1001-8600 • Fax: (52) 81-8000-7091 • Watts.com

© 2015 Watts